E-PER **Spare Parts**

HOME CARRELLO RICERCA MERCATO LIN

Alfa Romeo » GIULIA » 6S GIULIA (2016-....) » 707 ACCESSORI ESTERNI » 70727 -> PARAURTI POSTERIORE » 70727-010 PARAURTI POSTERIORE

Filtri attivi: SINCOM: 620PR0001000 ♦ VIN: ZAREAECNXH7524269 ♦ N. Ricambi: 03014706 ♦ Motore: 1001257 ♦ 24/10/2016 ♦ Col. n.: 451 ♦ CC2.0 ♦ KW147 ♦ GSX ♦ TC3V ♦ CMBBZ ♦ LL1

1 di 1	Tavola	Variante	Revisione
	70727-010 - PARAURTI POSTERIORE	1	0

Menu

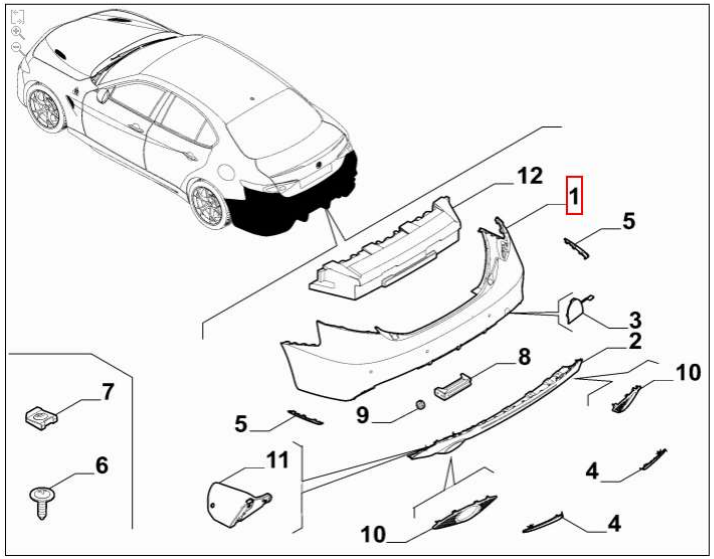

		Cod.	Descrizione	Valid.	M.	Q.tà
	~~1~~	~~156126943~~	PARAURTI POSTERIORE	!4TU + !508 + !52B + !XAN + (KW132, KW206) + (LL0, LL1)		1
	~~1~~	~~156126957~~	PARAURTI POSTERIORE	!4TU + 508 + !52B + !XAN + (KW132, KW206) + (LL0, LL1)		1
	~~1~~	~~156126957~~	PARAURTI POSTERIORE	!4TU + !508 + 52B + !XAN + (KW132, KW206) + (LL0, LL1)		1
	~~1~~	~~156126971~~	PARAURTI POSTERIORE	!4TU + 508 + !52B + XAN + (KW132, KW206) + (LL0, LL1)		1
	~~1~~	~~156126971~~	PARAURTI POSTERIORE	!4TU + !508 + 52B + XAN + (KW132, KW206) + (LL0, LL1)		1
	~~1~~	~~156126971~~	PARAURTI POSTERIORE	!4TU + 508 + !52B + LL2 + XAN + (KW132, KW206)		1
	~~1~~	~~156126943~~	PARAURTI POSTERIORE	!4TU + !508 + !52B + !XAN + (KW100, KW110, KW147) + (LL0, LL1)		1
	1	156126957	PARAURTI POSTERIORE	!4TU + !508 + 52B + !XAN + (KW100, KW110, KW147) + (LL0, LL1)		1
	~~1~~	~~156126971~~	PARAURTI POSTERIORE	!4TU + 508 + !52B + XAN + (KW100, KW110, KW147) + (LL0, LL1)		1
	~~1~~	~~156126971~~	PARAURTI POSTERIORE	!4TU + !508 + 52B + XAN + (KW100, KW110, KW147) + (LL0, LL1)		1
	~~1~~	~~156132177~~	PARAURTI POSTERIORE	4TU + !508 + !52B + LL3 + !XAN		1
	~~1~~	~~156132192~~	PARAURTI POSTERIORE	4TU + 508 + !52B + LL3 + XAN		1
	~~1~~	~~156132207~~	PARAURTI POSTERIORE	4TU + !508 + 52B + LL3 + !XAN		1
	~~1~~	~~156132207~~	PARAURTI POSTERIORE	4TU + 508 + !52B + LL3 + !XAN		1
	~~1~~	~~156127063~~	PARAURTI POSTERIORE	!4TU + 508 + !52B + LL15 + XAN		1
	~~1~~	~~156132192~~	PARAURTI POSTERIORE	4TU + !508 + 52B + XAN + (LL0, LL1, LL2)		1
	~~1~~	~~156132192~~	PARAURTI POSTERIORE	4TU + 508 + !52B + XAN + (LL0, LL1, LL2)		1
	~~1~~	~~156132207~~	PARAURTI POSTERIORE	4TU + !508 + 52B + !XAN + (LL0, LL1, LL2)		1
	~~1~~	~~156132207~~	PARAURTI POSTERIORE	4TU + 508 + !52B + !XAN + (LL0, LL1, LL2)		1
	~~1~~	~~156126957~~	PARAURTI POSTERIORE	!4TU + 508 + !52B + !XAN + (KW100, KW110, KW147) + (LL0, LL1)		1
	~~1~~	~~156132192~~	PARAURTI POSTERIORE	4TU + !508 + 52B + LL3 + XAN		1
	~~2~~	~~156124050~~	PARAURTI POSTERIORE	!4TU + (KW100, KW110) + (LL0, LL1, LL2)		1
	~~2~~	~~156124051~~	PARAURTI POSTERIORE	!4TU + (KW132, KW154, KW206) + (LL0, LL1, LL2)		1
	~~2~~	~~156111439~~	PARAURTI POSTERIORE	4TU + (LL0, LL1, LL2, LL3)		1

4TU - PARAURTI EXTRA SERIE 2 [BUMBER EXTRA SERIES 2]
508 - SENSORE DI PARCHEGGIO [PARKING SENSOR]
!52B - SENZA SENSORE PARCHEGGIO POSTERIORE [REAR PARKING SENSOR]
LL3 - LIVELLO DI ALLESTIM.:VELOCE
XAN - BLIND SPOT DETECTION

	2	156124050	PARAURTI POSTERIORE	!4TU + !81E + KW147 + (LL0, LL1)		1
	~~2~~	~~156124051~~	PARAURTI POSTERIORE	!4TU + 81E + KW147 + LL1		1
	~~2~~	~~156131356~~	PARAURTI POSTERIORE	LL15		1
	3	156115009	TAPPO	!4TU + (LL0, LL1, LL2)		1
	~~3~~	~~156132264~~	TAPPO	4TU + (LL0, LL1, LL2, LL3)		1
	~~4~~	~~50552577~~	CATADIOTTRO, DESTRO	LL15		1
	4	50546561	CATADIOTTRO, DESTRO	!4TU + (LL0, LL1, LL2)		1
	~~4~~	~~50552577~~	CATADIOTTRO, DESTRO	4TU + (LL0, LL1, LL2, LL3)		1
	~~4~~	~~50552578~~	CATADIOTTRO, SINISTRO	LL15		1
	4	50546562	CATADIOTTRO, SINISTRO	!4TU + (LL0, LL1, LL2)		1
	~~4~~	~~50552578~~	CATADIOTTRO, SINISTRO	4TU + (CC2.0, CC2.2) + (LL0, LL1, LL2, LL3)		1
	~~5~~	~~156114906~~	MOSTRINA, DESTRO	CC2.9		1
	~~5~~	~~156114908~~	MOSTRINA, SINISTRO	CC2.9		1
	~~6~~	~~51990106~~	VITE	LL15		3
	7	51998498	MOLLETTA			2
	~~8~~	~~50538795~~	STAFFA	CC2.9		3
	~~9~~	~~14059218~~	DADO	LL15		3
	~~10~~	~~156121433~~	GRIGLIA, DESTRO	4TU		1
	~~10~~	~~156121434~~	GRIGLIA, SINISTRO	4TU		1
	~~11~~	~~50540774~~	RINFORZO, DESTRO	LL15		1
	~~11~~	~~50540775~~	RINFORZO, SINISTRO	LL15		1
	~~12~~	~~50551177~~	TAMPONE, ASSORBITORE POSTERIORE	AM40, AM47, AM58		1